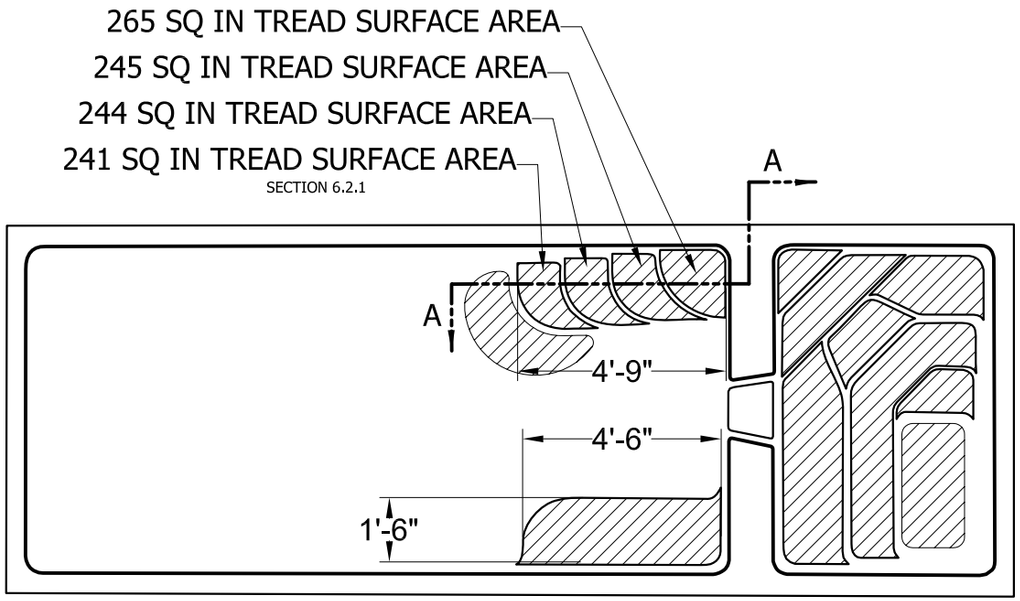


## PLAN VIEW

SCALE 1/4" = 1'-0"

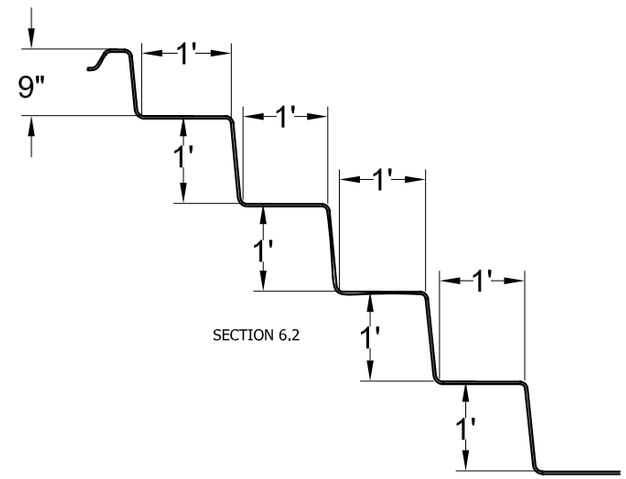


## STEP SECTION A-A

SCALE 1/2" = 1'-0"

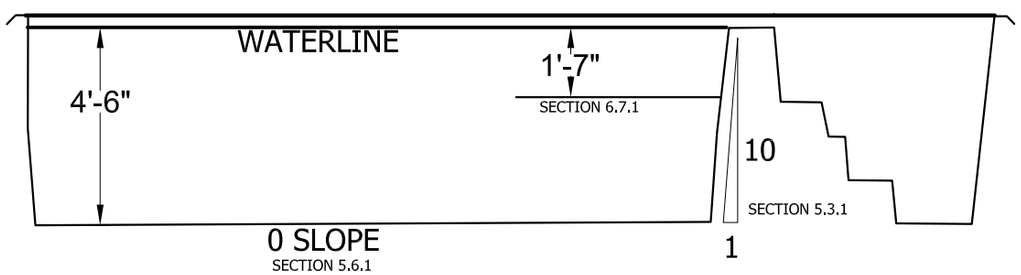


## ELEVATION

SCALE 1/4" = 1'-0"

NON-SKID (SECTION 8.1)

AREA: 159 SQ FT
PERIMETER: 70 FT
VOLUME: 4240 GAL

| CYBERLANE 750 NSPI-5 | |
|---|---|
| SCALE AS NOTED | DATE 05-29-08 |
| DRAWN BY KLB | REVISION 01 |